ME SERIES ELECTRIC ACTUATORS

Product Overview

ME... Series electric ball valves are electric actuators operated by a variety of wiring methods. The valve body is characterized by strong corrosion resistance, rapid installation, instant opening and lightweight body. The electric actuator has a small appearance, wear-resistant shell, and has been equipped with protective guards. Electric actuator working power usually have: AC100.... . 240V, AC/DC24V and so on.

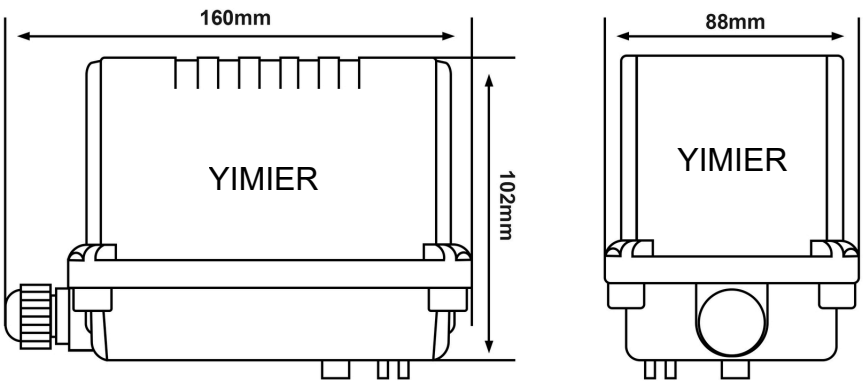

Product Model

MEA220 MEA/D24 MED12 Three-wire two-control control
MEA220-31 MEA/D24-31 MED12-31 Three-wire one-control control
MEA220-2K MEA/D24-2K MED12-2K 2-wire normally open control
MEA220-2B MEA/D24-2B MED12-2B 2-wire normally closed control

Product Parameter

Actuator Parameter			
Product Brand	YIMIER	Wiring Method	3-wire 1-control/ 3-wire 2-control/ 2-wire power failure reset
Product type	XXX+ME...	Form	Electric
Product name	Electric Valve	Temperature	-30℃~60℃
Nominal current	0.10A	Running time	15s
Operating Pressure	1.0MPa	Caliber	DN15-DN50
Protection Class	IP54	Angle of Rotation	0~90℃

Wiring Diagram

1. Suitable for MEA220, MEA24, MED24, MED12 actuators

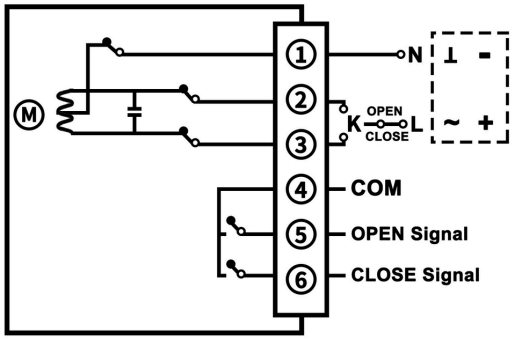

Three-wire two-control wiring diagram

①, ② energized, valve open，④, ⑤ connected, valve open in place Feedback;
①, ③ energized, valve closed，④, ⑥ connected, valve closed in place Feedback

2. Applicable to MEA220-31 actuator

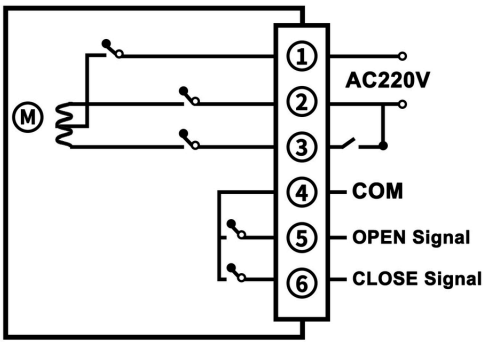

Three-wire one-control wiring diagram(AC220V)

①,②,③ Power on and open the valve;
①,② Power on, ③Disconnect, valve closed

3. Suitable for MEA24-31, MED24-31 MED12-31 actuators.

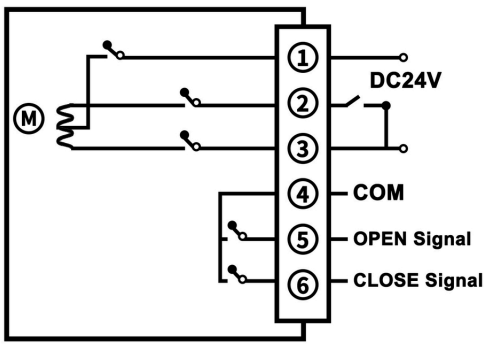

Three-wire one-control wiring diagram(DC24V)

① ②, ③ Power on and open the valve;
① ③ Power on, ② Disconnect, valve closed

4. Applicable to MEA220-2B, MEA24-2B, MED24-2B MED12-2B MEA220-2K, MEA24-2K, MED24-2K, MED12-2K actuator

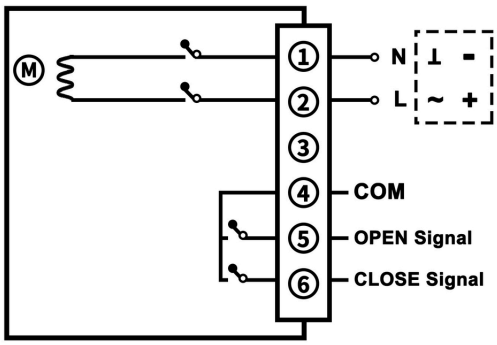

Power off reset wiring diagram

①, ② energized, valve open ④, ⑤ energized, valve open in place Feedback;
①, ② de-energized, valve closed ④, ⑥ energized, valve closed in place Feedback

Manual operation

◆ Do not operate manually until the power is off.
◆Top up the manual device with M5 hexagonal wrench, so when it is tighter, you can shake the wrench left and right for a few times, and then turn left for opening the valve and right for closing the valve after topping up.
◆When using manual adjustment, please note that the pointer of the window should not exceed the range of the switching scale accidentally to avoid the damage of the internal parts.

10PPH3T/LQ+ME... SERIES ELECTRIC PPH BALL VALVE

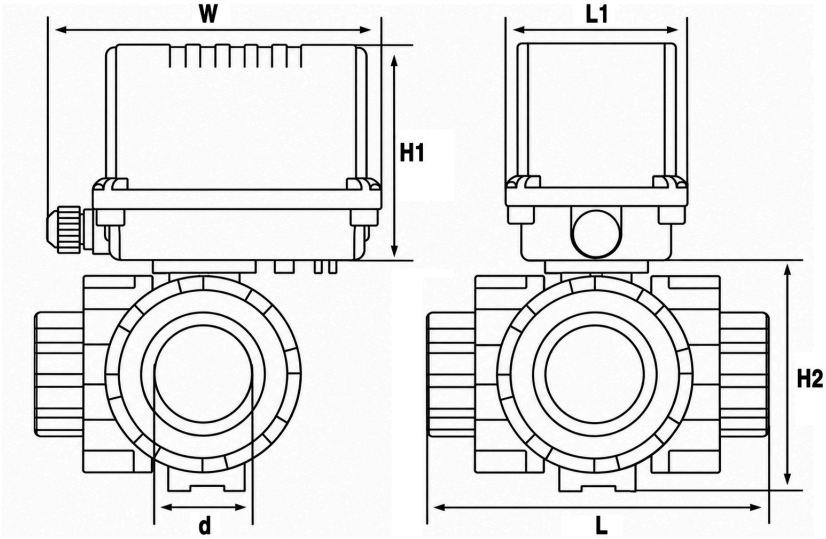

Parameter & Dimensions (mm)

Valve parameter	
Caliber	DN15-DN50
Pressure	PN10
O-ring material	EPDM
Material Body	PPH
Material Plate	PPH
Material Seat sealing	PTFE
Temperature	0~80℃
Connection method	True Union Solvent Cement /Threaded
Applicable Medium	Water, air, oil, corrosive medium

Model	Caliber	d	W	L1	H1	L	H2
10PPH3T/LQ+ME	DN15	19 (21.3)	160	88	102	122	63
	DN20	24 (26.7)	160	88	102	143	75
	DN25	32 (33.4)	160	88	102	160	82
	DN32	40 (42.2)	160	88	102	187	95
	DN40	50 (48.3)	160	88	102	217	111.5
	DN50	63 (60.3)	160	88	102	226	135